Display Warmer

ITEM:	39999	40003	44437	44438
MODEL:	RC-CN-0145C	RC-CN-0186C	RC-CN-0225C	DW-CN-0186

Item: 44438/ *47"*

Item: 39999/ *35"*

Item: 40003/ *26"*

Item: 44437/ *13"*

Keep your food hot at a perfect serving temperature.

Omcan's Elite Series Self-Serve Display Warmer is the perfect solution for keeping your food hot, fresh, and ready to go. Ideal for convenience stores, cafeterias, and food service counters.

This unit is designed to showcase hot food items while maintaining consistent serving temperatures. It features brilliant internal LED lighting for enhanced visibility, an adjustable temperature controller for optimal heat control, and three chrome-plated adjustable shelves to suit a variety of items. The smooth rear sliding doors ensure easy access for staff or customers, making it a convenient and efficient addition to any high-traffic food service area.

FEATURES:

- Internal LED illumination on top
- Adjustable temperature controller & display
- Adjustable chrome plated shelves
- 3 Shelves
- Sliding doors

Telephone: 1-800-465-0234 Fax: (905) 607-0234 Email: sales@omcan.com Website: www.omcan.com

Authorized Dealer

1 YEAR WARRANTY
1 YEAR PARTS AND LABOUR

Intertek Intertek

NEMA 5-15P 125VAC / 15 AMP

MADE IN CHINA

FOOD WARMERS

TECHNICAL SPECIFICATION				
Features	13”/ 76L Capacity	26”/ 96L Capacity	35”/ 136L Capacity	47”/ 186L Capacity
Item	44437	40003	39999	44438
Model	DW-CN-0076	DW-CN-0096	DW-CN-0136	DW-CN-0186
Capacity	76 L / 2.68 cu.ft.	96 L / 3.39 cu.ft.	136 L / 4.8 cu.ft.	186 L /6.6 cu. ft.
Power	800 W	1000 W	1100 W	1800 W
Lamp Power	1.44 (x 3) W			
Electrical	110V / 60Hz / 1Ph			
Temperature Range	30°C - 90°C / 86°F - 194°F			
Shelf Load Capacity	22 lbs. / 10 kg	22 lbs. / 10 kg	33.1 lbs. / 15 kg	22 lbs. / 10 kg
Shelf Dimensions	**Top:** 11.4” x 11.3”/ 289 x 287mm **Middle:** 11.4” x 12.4”/ 289 x 316mm **Bottom:** 11.4” x 13.7/ 289 x 348mm	**Top:** 24.4” x 11.3”/ 621 x 287mm **Middle:** 24.4” x 12.4”/ 621 x 316mm **Bottom:** 24.4” x 13.7”/ 621 x 347mm	**Top:** 33.7” x 11.3”/ 857 x 287mm **Middle:** 33.7” x 12.4”/ 857 x 316mm **Bottom:** 33.7” x 13.7”/ 857 x 347mm	**Top:** 45.7” x 11.3”/ 1161 x 287mm **Middle:** 45.7” x 12.4”/ 1161 x 316mm **Bottom:** 45.7” x 13.7”/ 1161 x 347mm
Net Weight	46.7 lbs. / 21.2 kg	73.9 lbs. / 33.5 kg	91.5 lbs. / 41.5 kg	117.9 lbs. / 53.5 kg
Gross Weight	50.7 lbs. / 23 kg	96 lbs. / 43.5 kg	136 lbs / 61.7 kg	123.45 lbs. / 56 kg
Net Dimensions (WDH)	13.6” x 19.1” x 26.1”/ 345x 484 x 663 mm	25.75” x 19.8” x 26.2” / 654 x 503 x 665 mm	35” x 18.8” x 26.2”/ 889 x 477.5 x 665 mm	47.4” x 19.38” x 26” / 1204 x 492.45 x 662.5 mm
Gross Dimensions (WDH)	16.1” x 21.7” x 28” / 408 x 551 x 710 mm	29.1” x 21.7” x 27.4” / 740 x 551 x 696 mm	38.3” x 21.7” x 27.4” / 973 x 551 x 696 mm	50.3” x 21.69” x 27.36” / 1278 x 551 x 695 mm

TECHNICAL DRAWING

Item: 44437/ *13"*

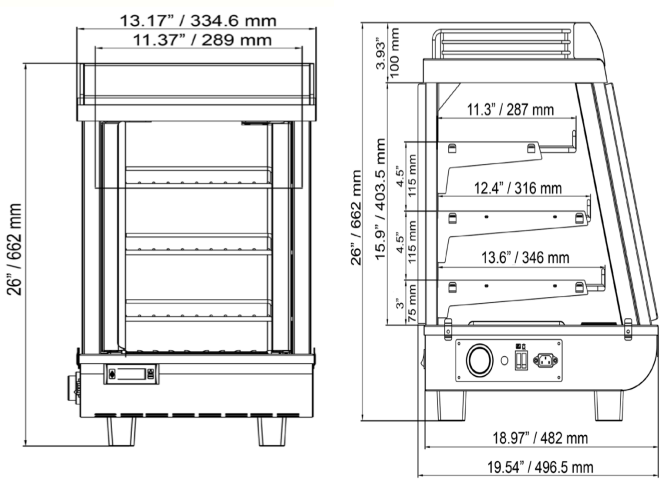

Item: 40003/ *26"*

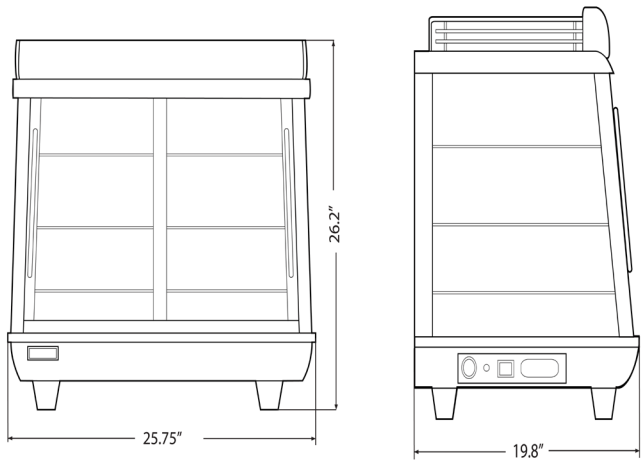

Item: 39999/ *35"*

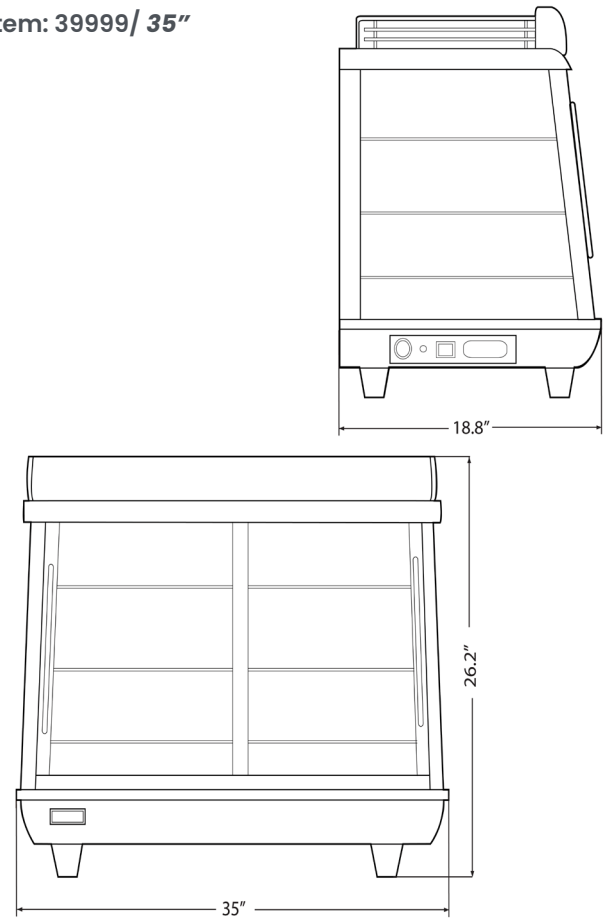
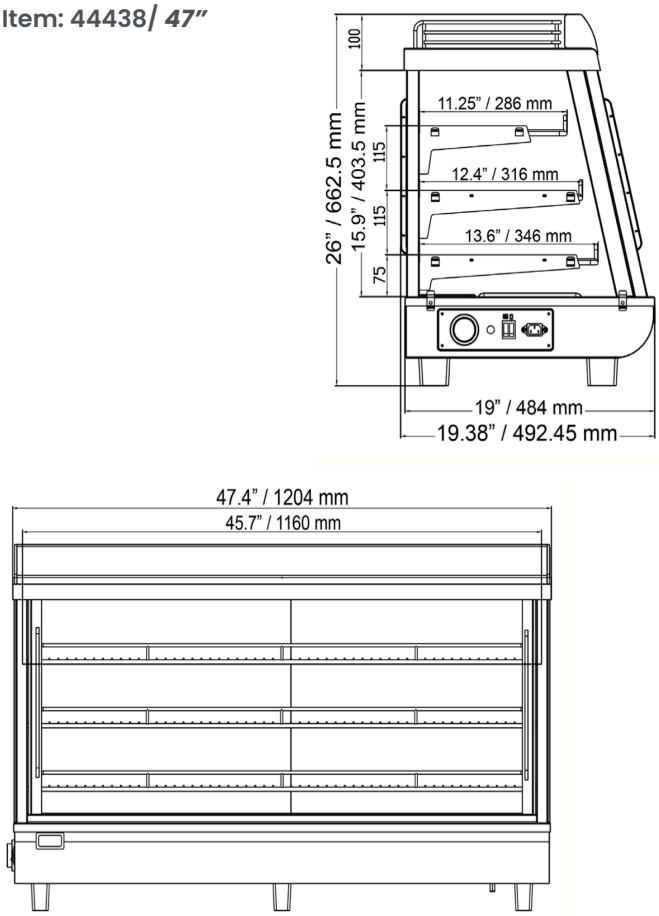
Item: 44438/ *47"*